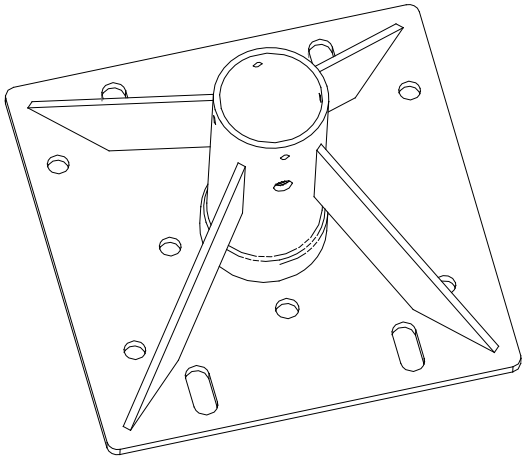

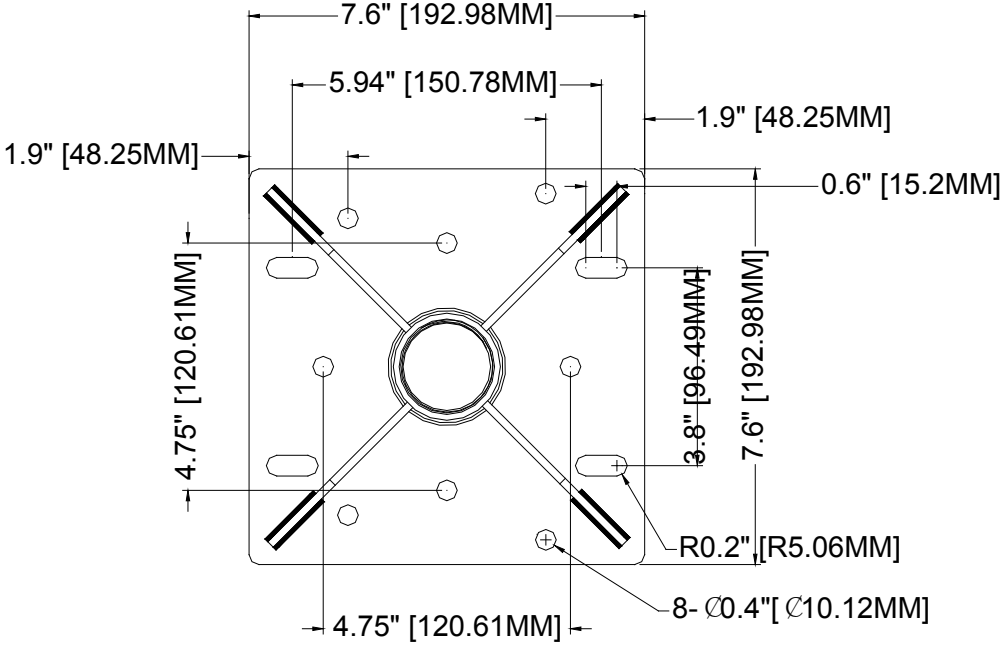

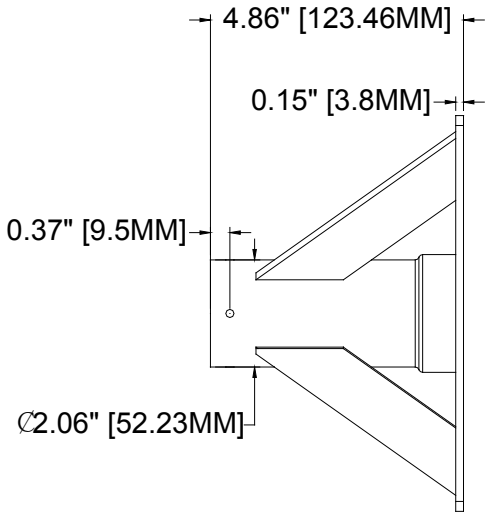

The information in this drawing is the sole property of Wize AV. Any reproduction in part or as a whole without the written permission of Wize AV is prohibited.

www.wize-av.com | info@wize-av.com

AV MOUNTING SOLUTIONS

TITLE:	
Wize Pro CAU8HD	
SIZE B	DWG.NO. CAU8HD